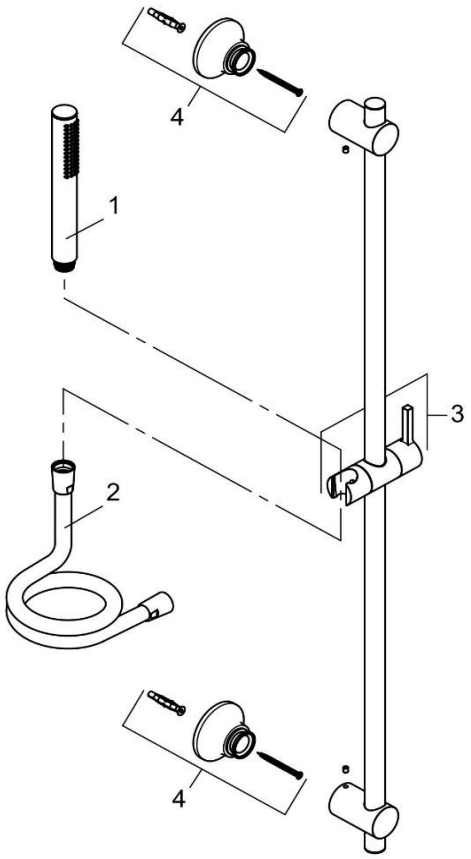

2084005-35		Brause- Set	shower set
1	3912005-00	HANDBRAUSE	HANDSHOWER
2	6107205-00	BRAUSESCHLAUCH	SHOWER HOSE
3	7381205-00	GLEITSCHIEBER	GILDER
4	7381505-00	ROSETTE	ESCUTCHEON